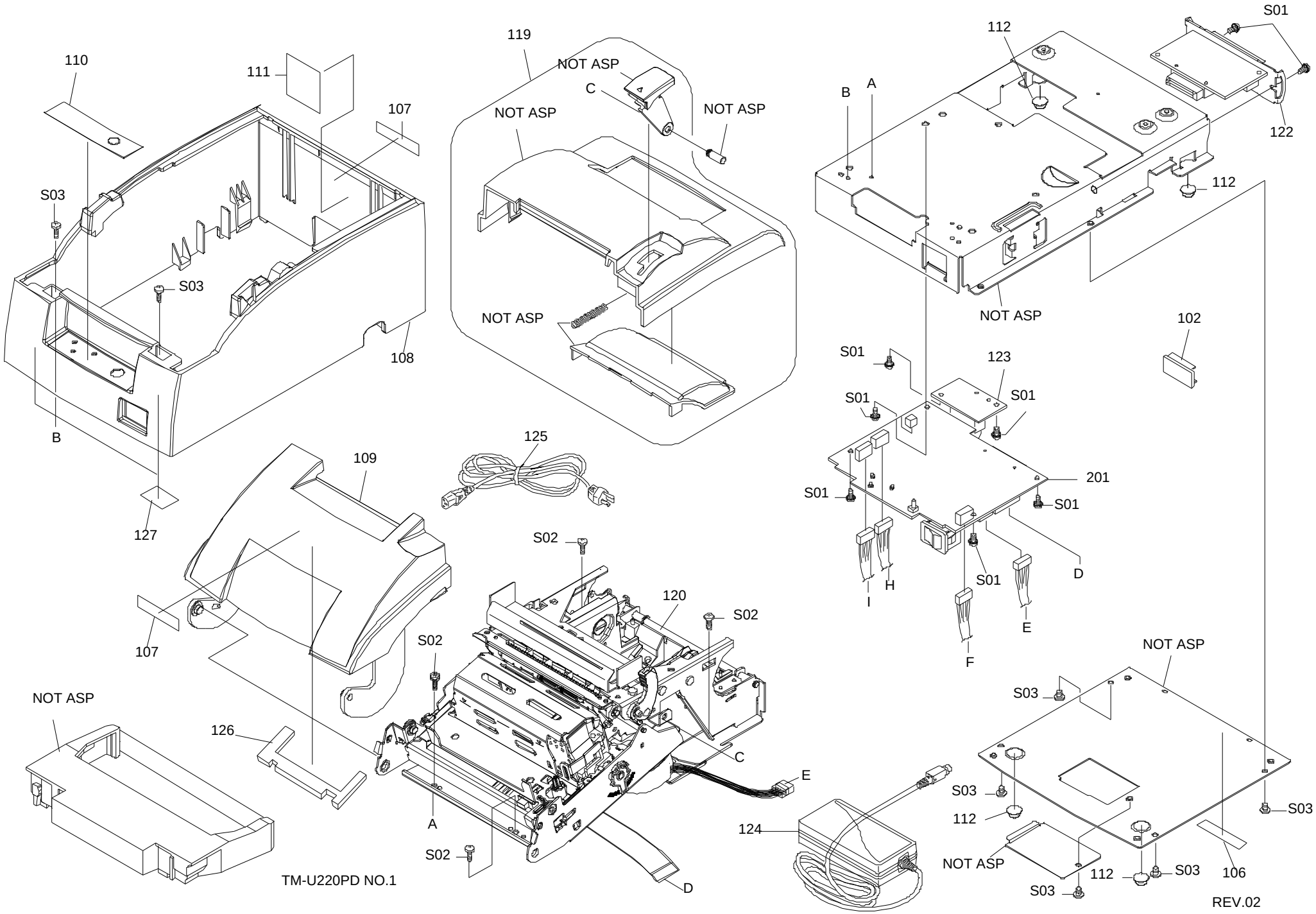
110
111
107
S03
S03
108
B
127
119
NOT ASP
C
NOT ASP
NOT ASP
NOT ASP
112
S01
B
A
122
112
NOT ASP
102
S01
123
S01
S01
S01
201
S01
S01
D
I
H
S01
E
F
125
109
107
S02
120
S02
S02
C
E
A
S02
D
NOT ASP
126
124
NOT ASP
S03
S03
112
S03
NOT ASP
112
S03
S03
106
REV.02
TM-U220PD NO.1

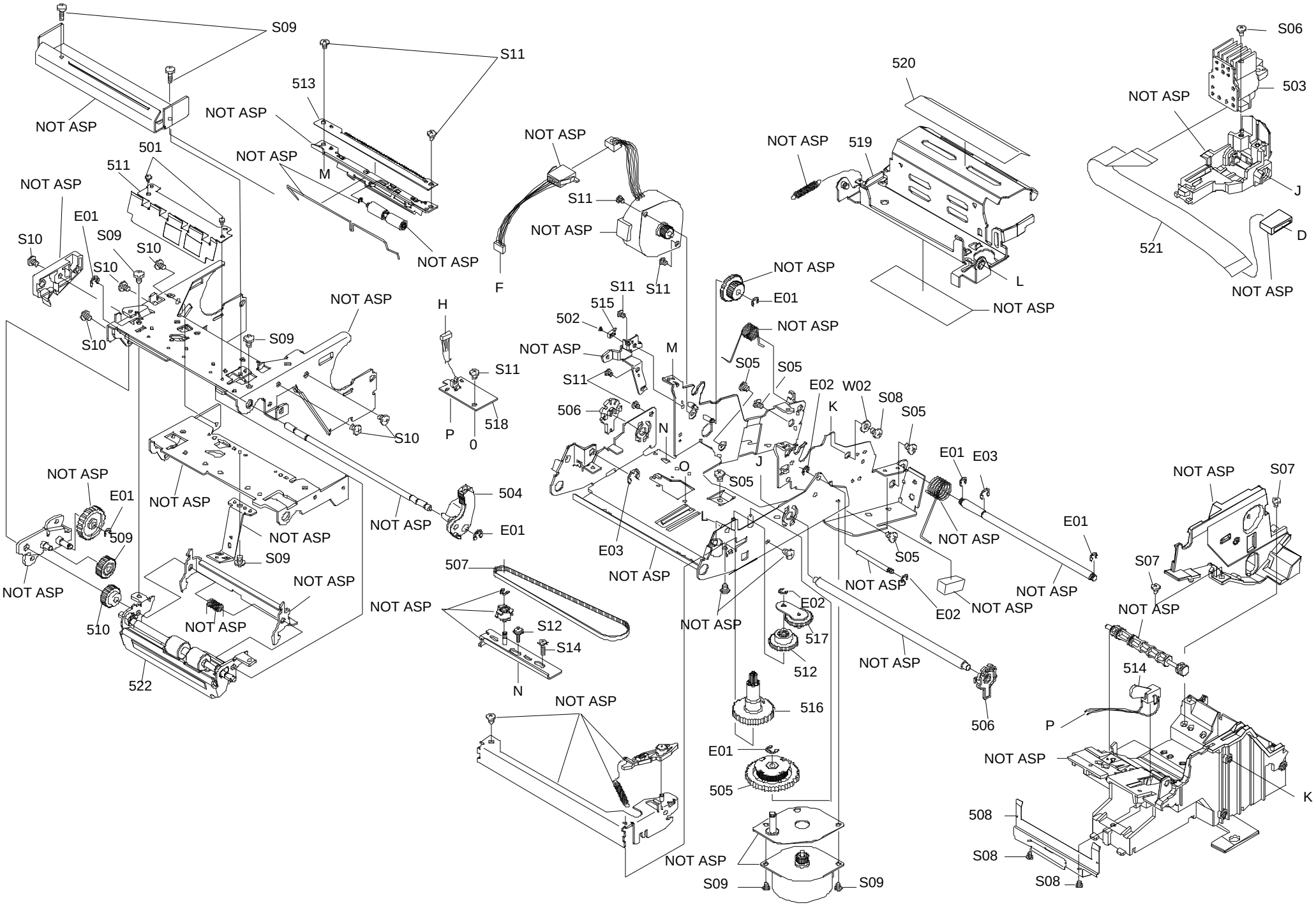
S09
NOT ASP
S11
513
NOT ASP
NOT ASP
M
NOT ASP
501
511
NOT ASP
E01
S10
S09
S10
S10
S10
NOT ASP
S09
NOT ASP
NOT ASP
E01
509
NOT ASP
NOT ASP
S09
NOT ASP
510
NOT ASP
522
NOT ASP
NOT ASP
504
E01
507
NOT ASP
S12
S14
N
NOT ASP
NOT ASP
S11
S11
F
NOT ASP
H
S11
P
0
518
S11
515
502
NOT ASP
S11
506
N
M
O
E03
NOT ASP
NOT ASP
E01
NOT ASP
S05
S05
E02
W02
S08
S05
K
J
S05
L
NOT ASP
E02
517
512
NOT ASP
516
E01
505
NOT ASP
S09
S09
520
NOT ASP
519
L
NOT ASP
S06
503
NOT ASP
J
D
521
NOT ASP
E01
E03
E01
NOT ASP
S05
E02
NOT ASP
NOT ASP
506
NOT ASP
S07
S07
NOT ASP
514
P
NOT ASP
K
508
S08
S08