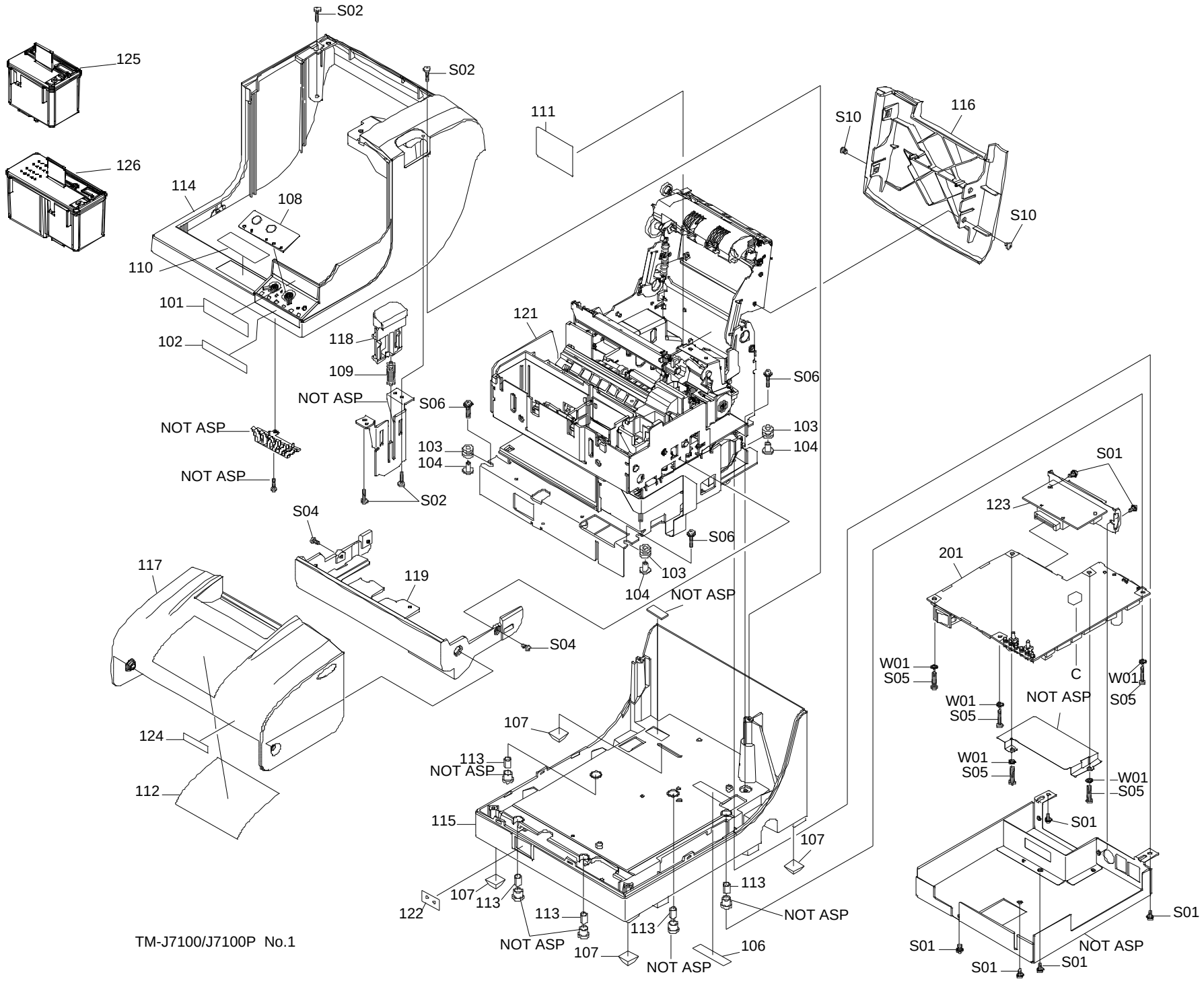
S02
125
S02
126
111
S10
116
114
108
S10
110
101
121
102
118
S06
109
NOT ASP
S06
103
NOT ASP
103
104
104
NOT ASP
S02
S01
S04
123
S06
201
117
119
103
104
NOT ASP
S04
W01
S05
C
W01
S05
W01
S05
NOT ASP
124
107
W01
S05
113
NOT ASP
W01
S05
112
S01
115
107
113
107
113
122
113
NOT ASP
S01
113
NOT ASP
S01
NOT ASP
107
106
NOT ASP
S01
S01
S01
TM-J7100/J7100P No.1
REV.03

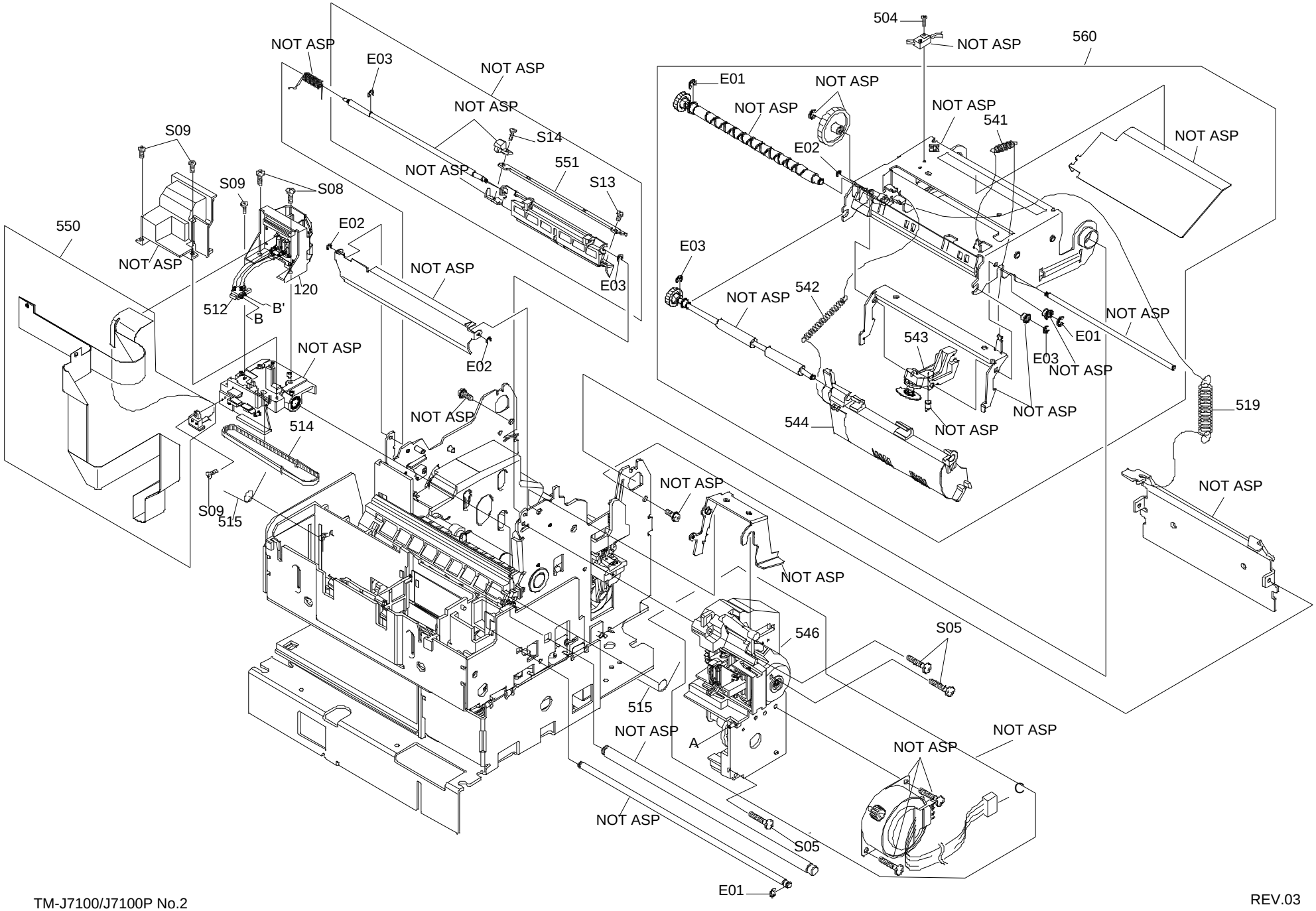
504
NOT ASP
560
E01
NOT ASP
NOT ASP
NOT ASP
541
NOT ASP
E02
NOT ASP
E03
NOT ASP
S14
551
NOT ASP
S13
E03
S09
S09
S08
550
E02
NOT ASP
NOT ASP
120
512
B'
B
E03
542
NOT ASP
NOT ASP
E01
543
E03
NOT ASP
NOT ASP
NOT ASP
E02
NOT ASP
519
544
NOT ASP
514
NOT ASP
NOT ASP
S09
515
NOT ASP
546
S05
515
NOT ASP
A
NOT ASP
NOT ASP
C
NOT ASP
S05
E01

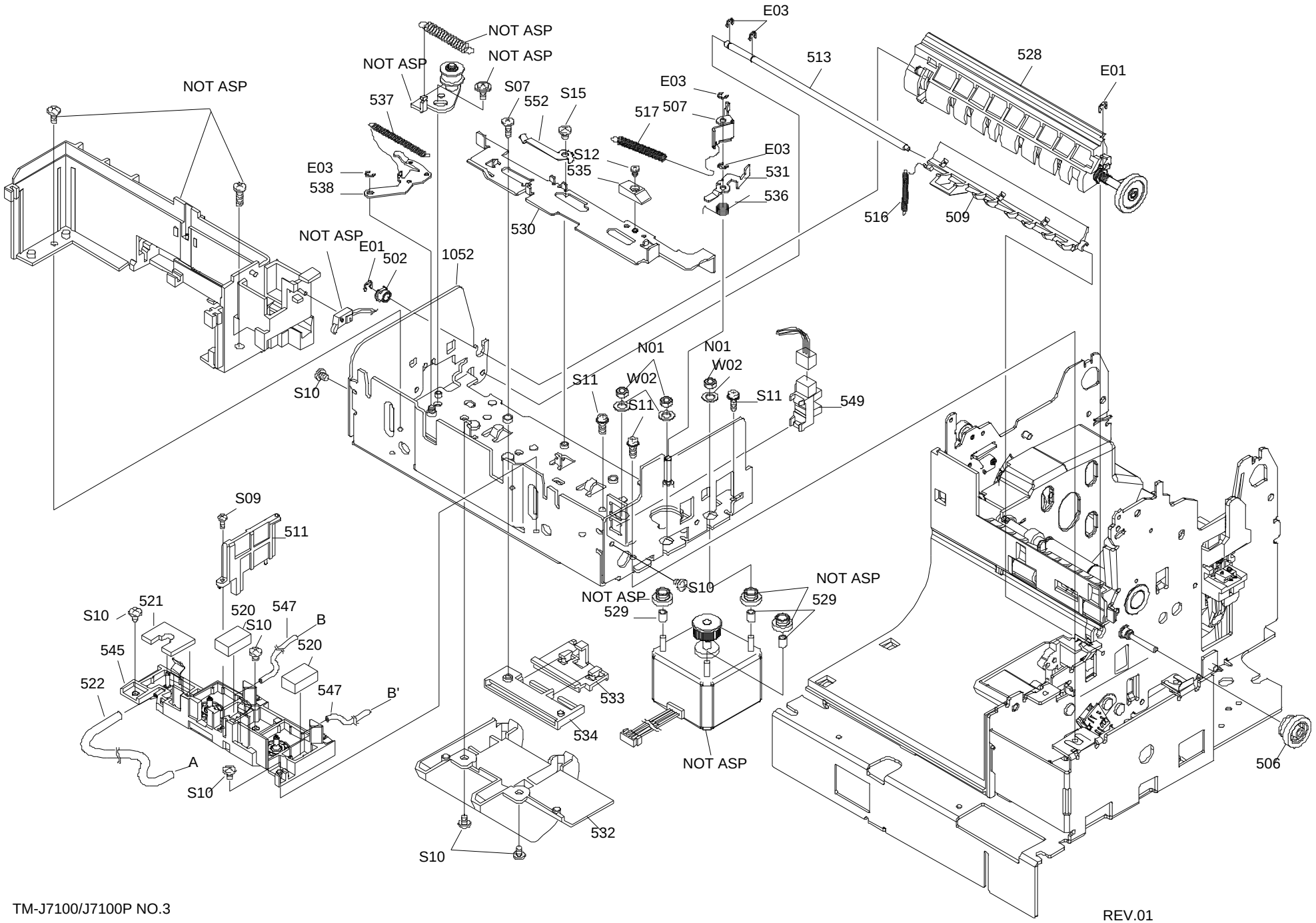
NOT ASP
NOT ASP
NOT ASP
NOT ASP
537
538
E03
S07
552
S15
S12
535
530
E03
517
507
E03
531
536
E03
513
528
E01
516
509
NOT ASP
E01
502
1052
S10
N01
N01
W02
W02
S11
S11
S11
549
S09
511
S10
521
520
547
S10
B
520
545
522
547
B'
A
S10
533
534
532
S10
S10
NOT ASP
529
NOT ASP
529
NOT ASP
506

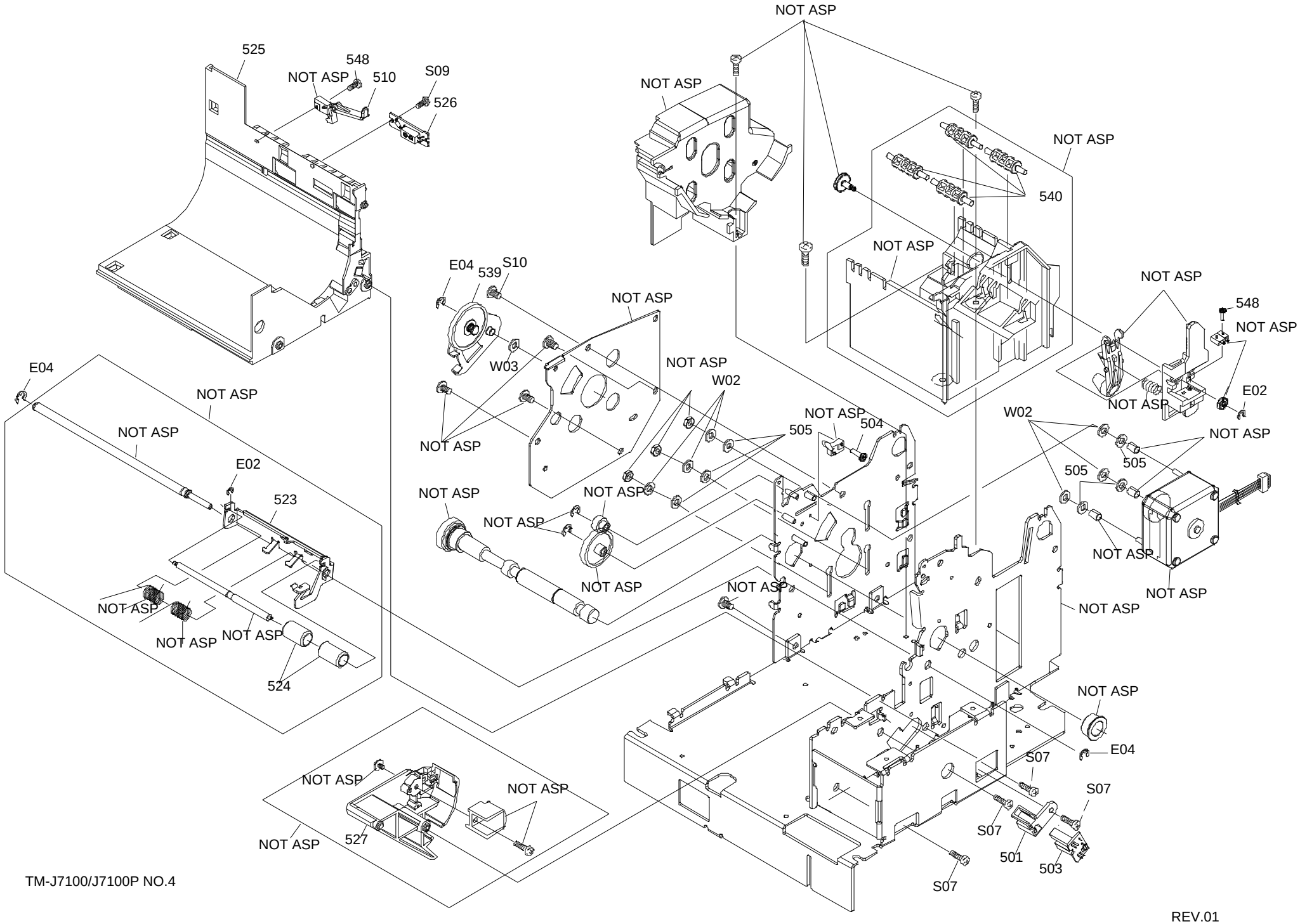

TM-J7100/J7100P NO.4

REV.01