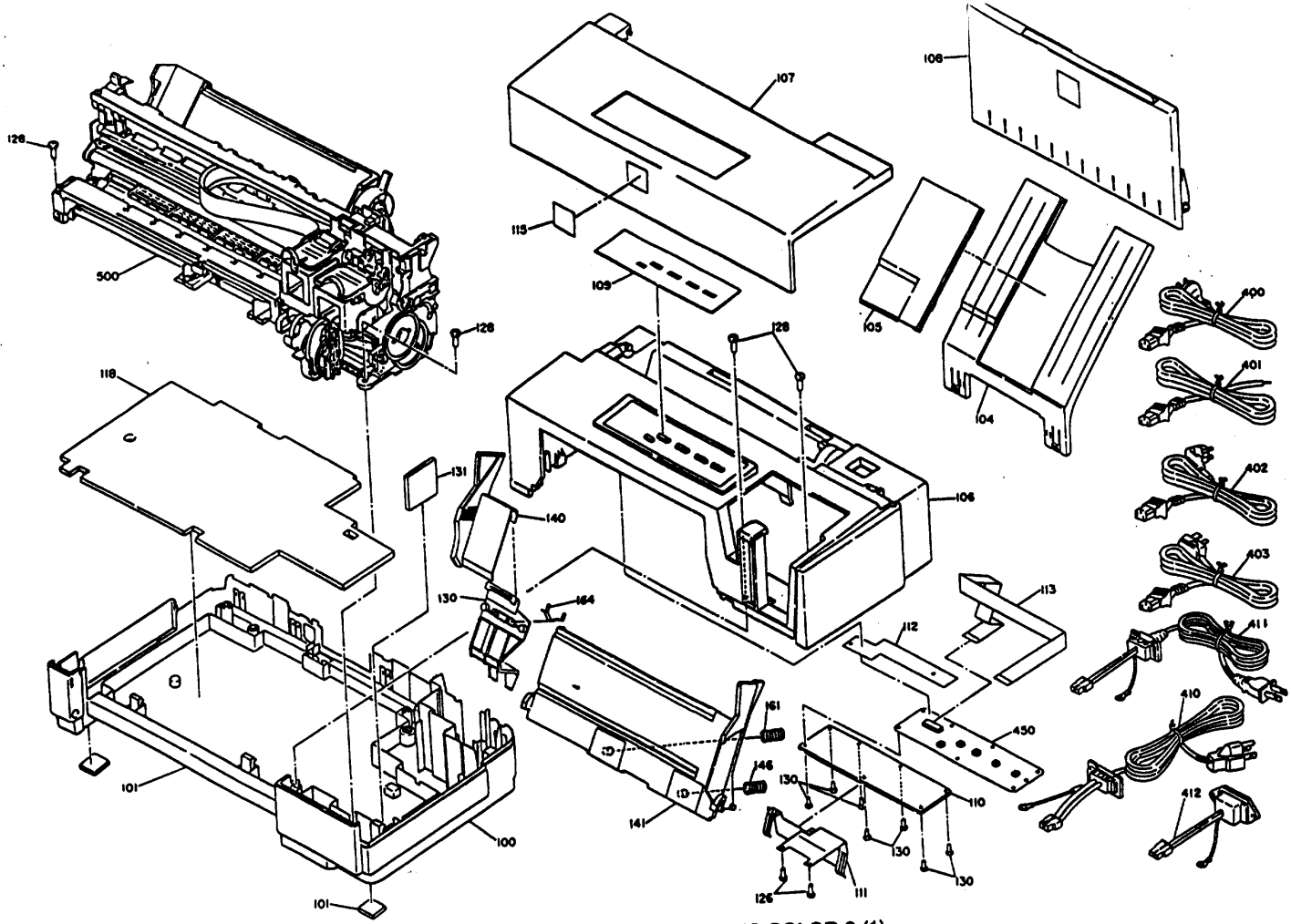

EXPLODED DIAGRAM FOR STYLUS COLOR 2 (1)

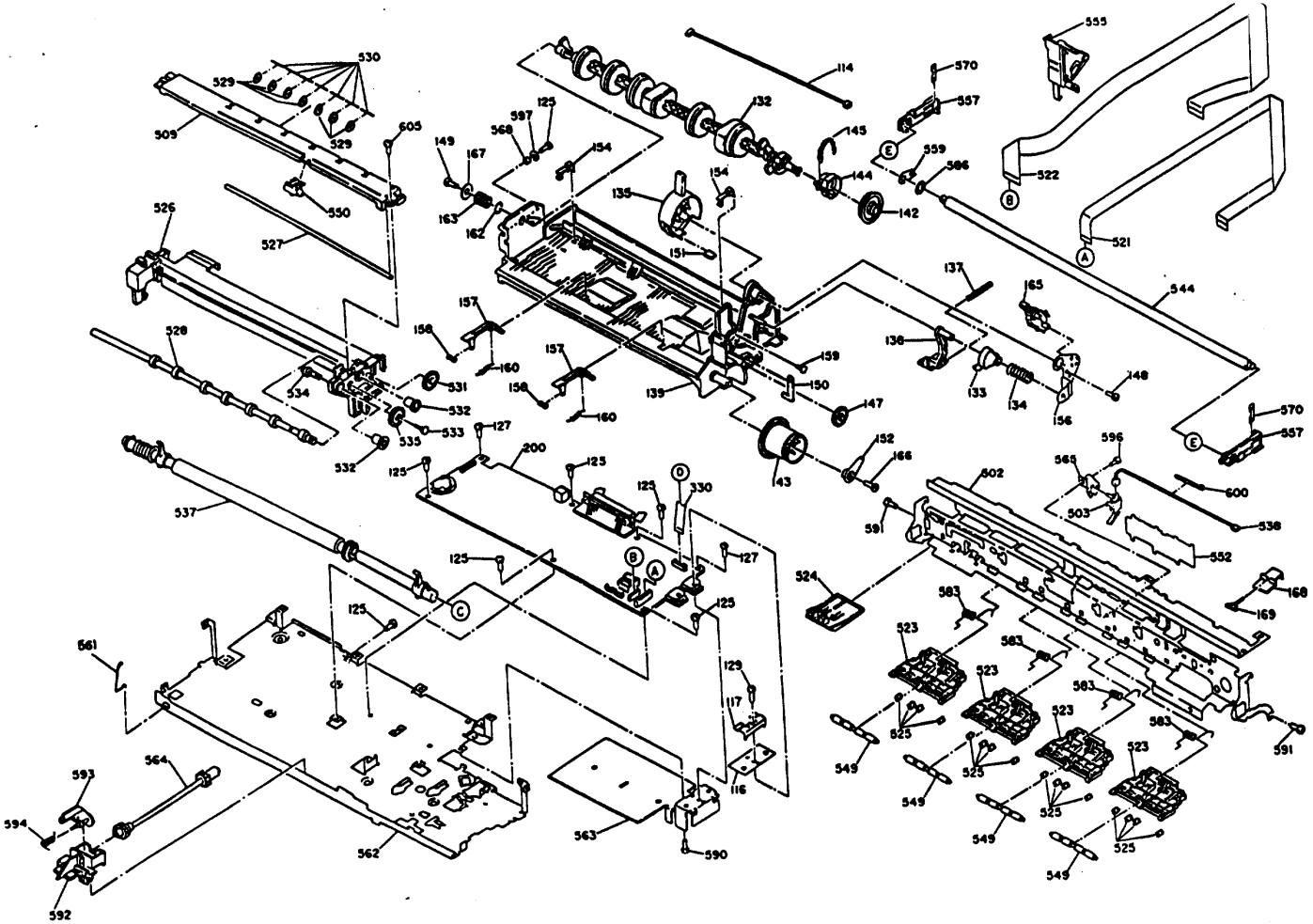

EXPLODED DIAGRAM FOR STYLUS COLOR 2 (2)

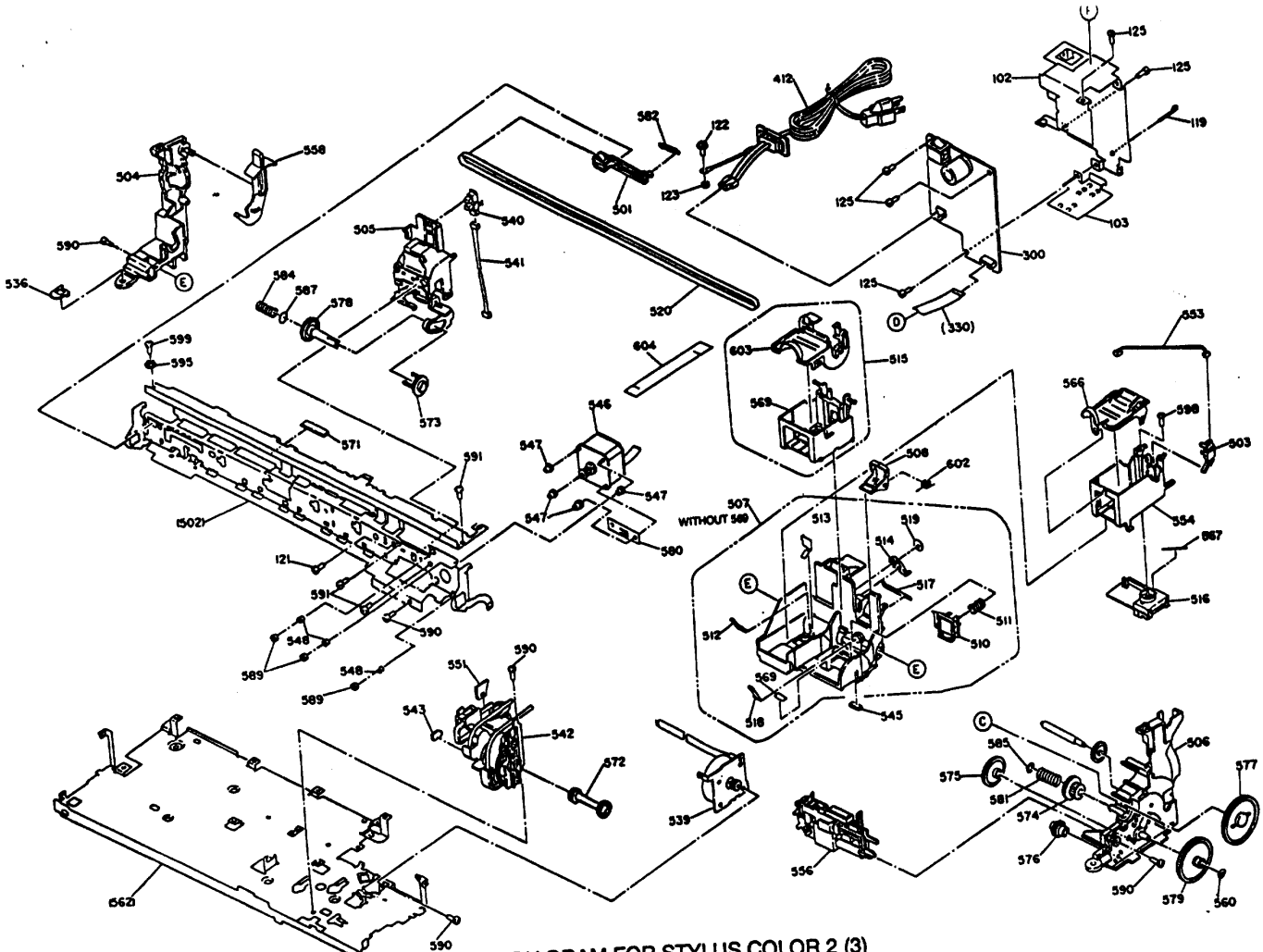

EXPLODED DIAGRAM FOR STYLUS COLOR 2 (3)

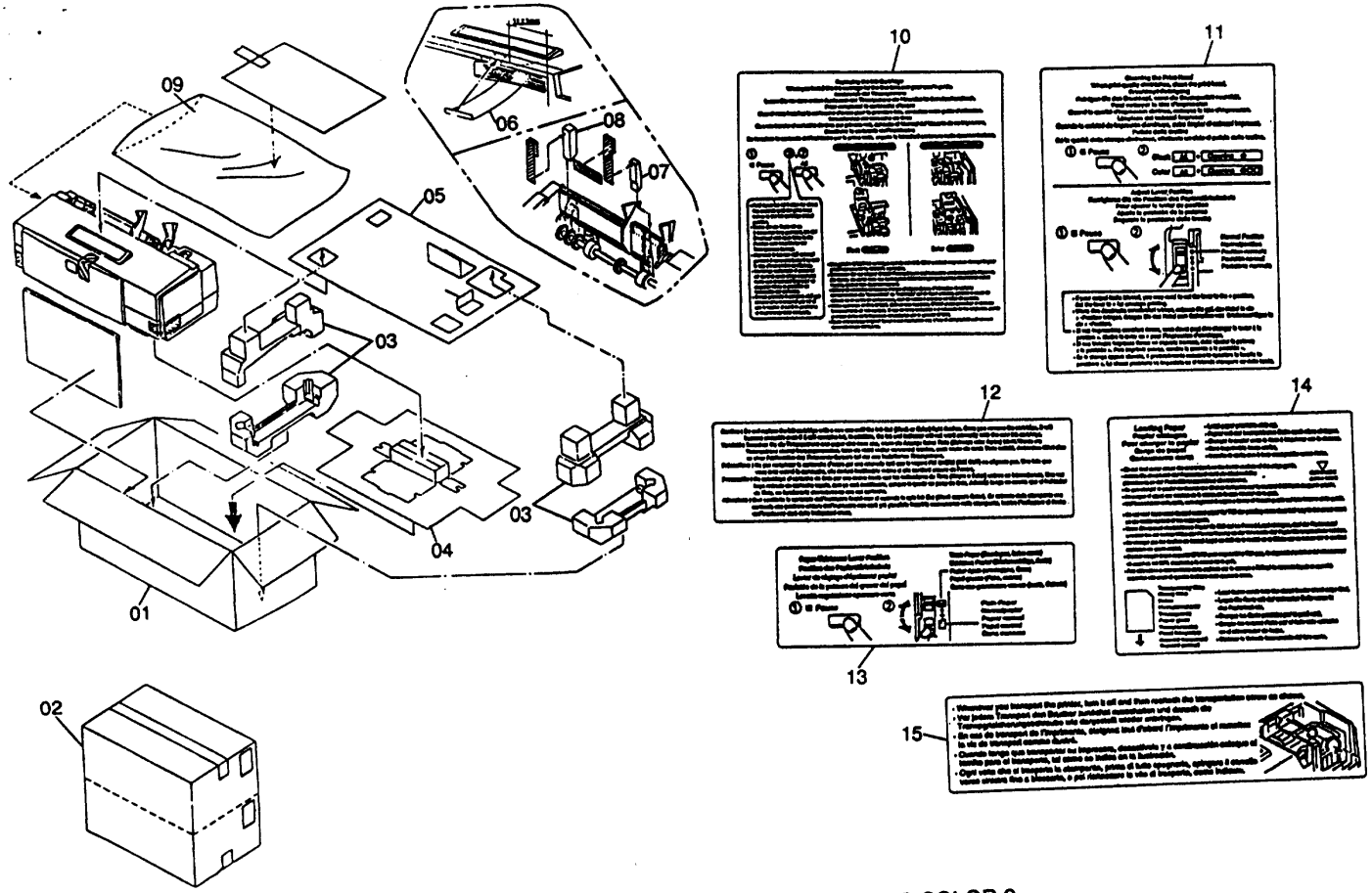

PACKING MATERIAL FOR STYLUS COLOR 2