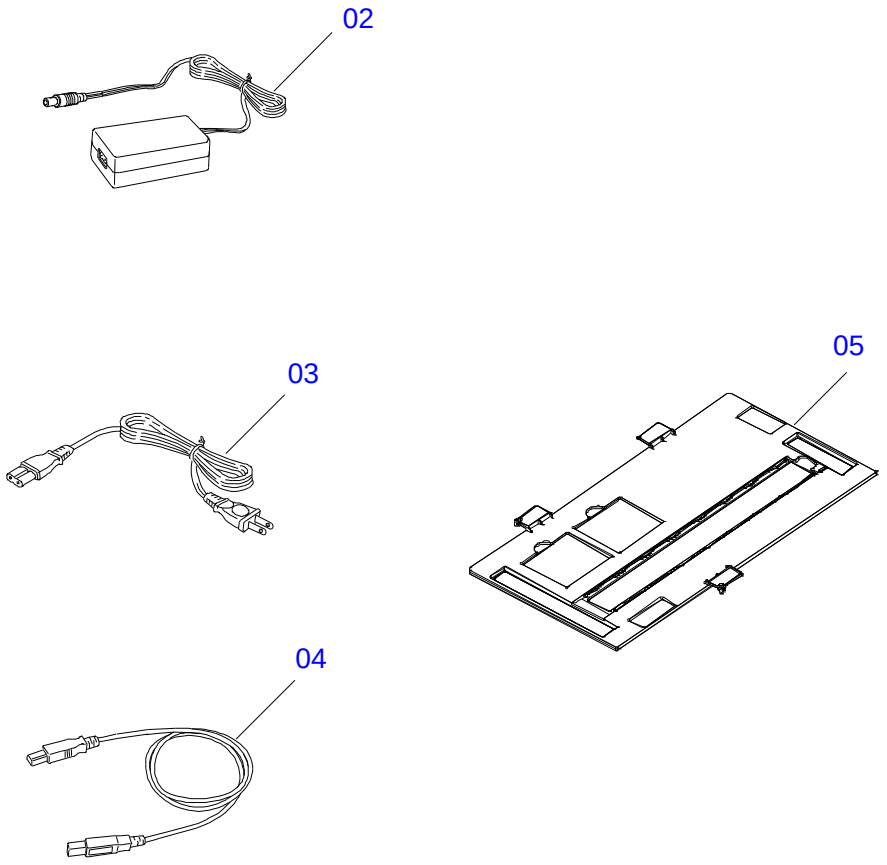
02
03
05
04

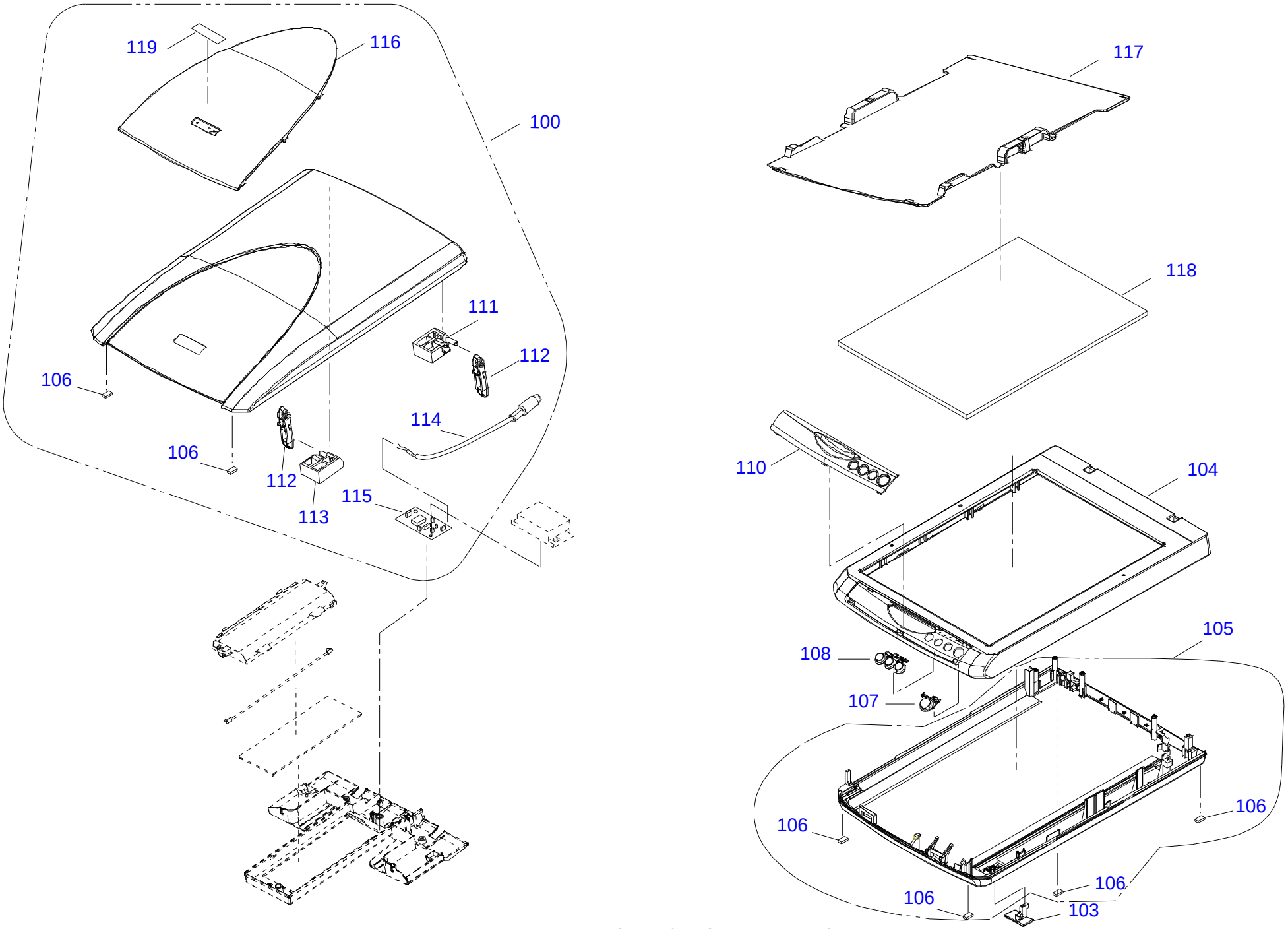

GT-F500 / Perfection 2480 Photo No.2 Rev.01 B172-CASE-0011 TPU

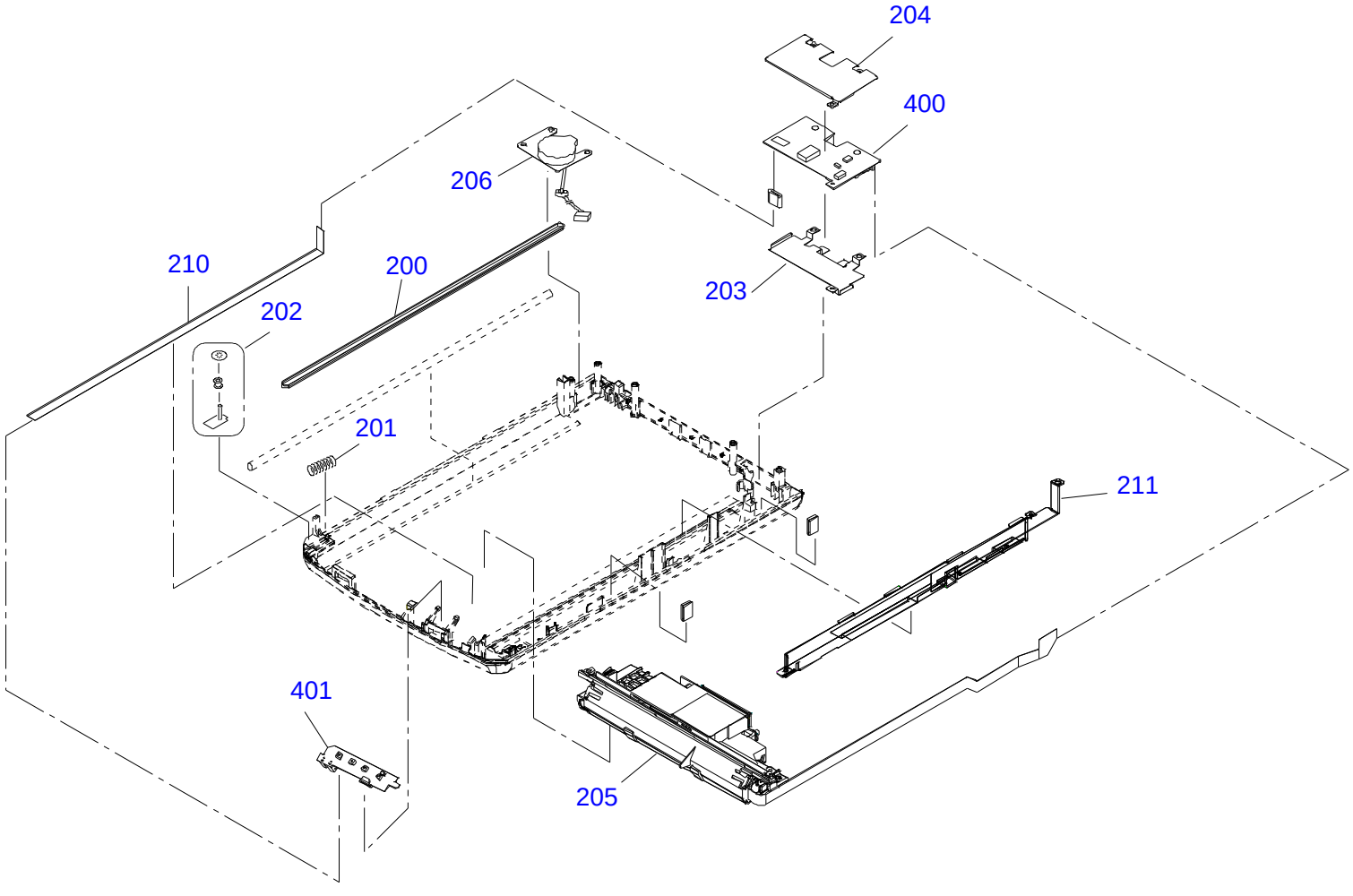

GT-F500 / GT-F550 / Perfection 2480 Photo / Perfection 2580 Photo No.3 Rev.01 B172-MECH-0011